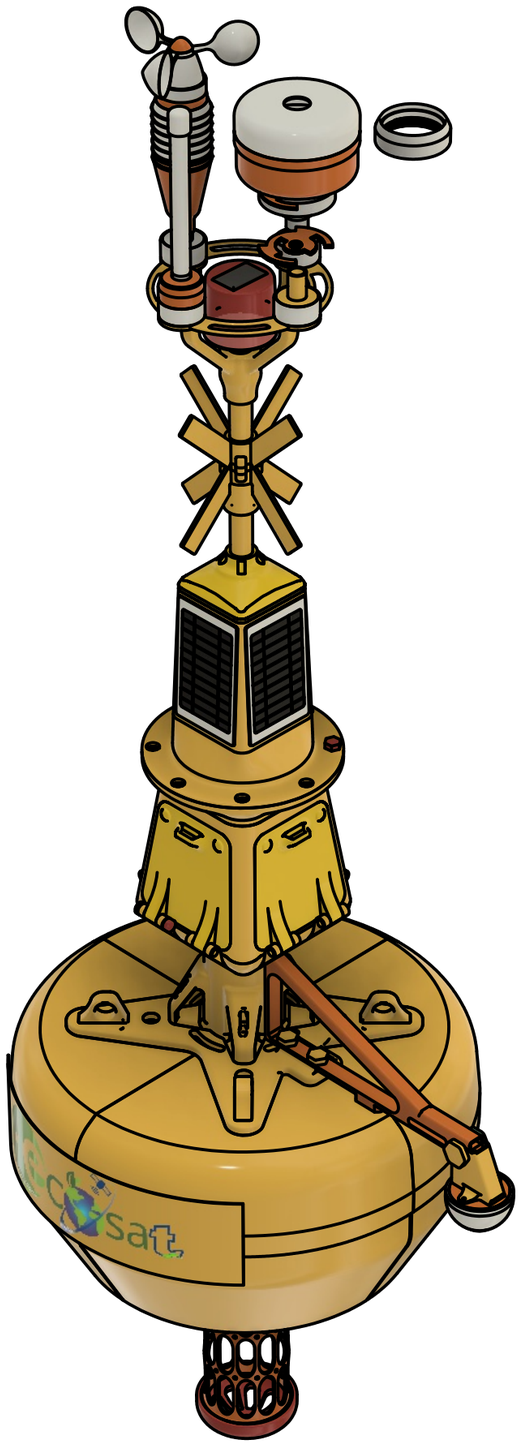

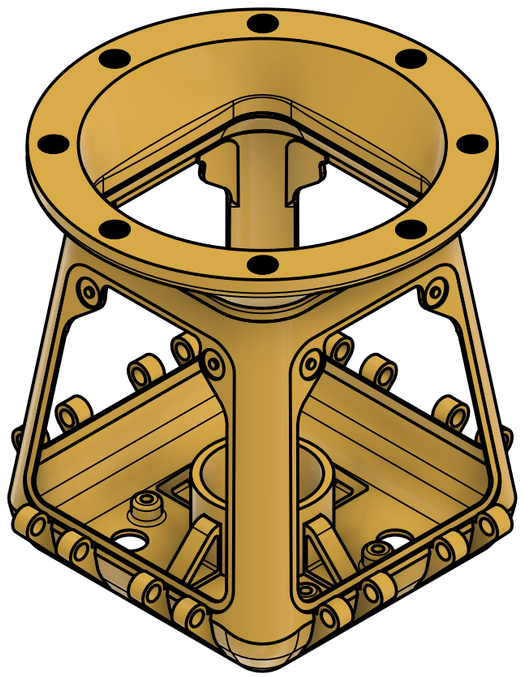

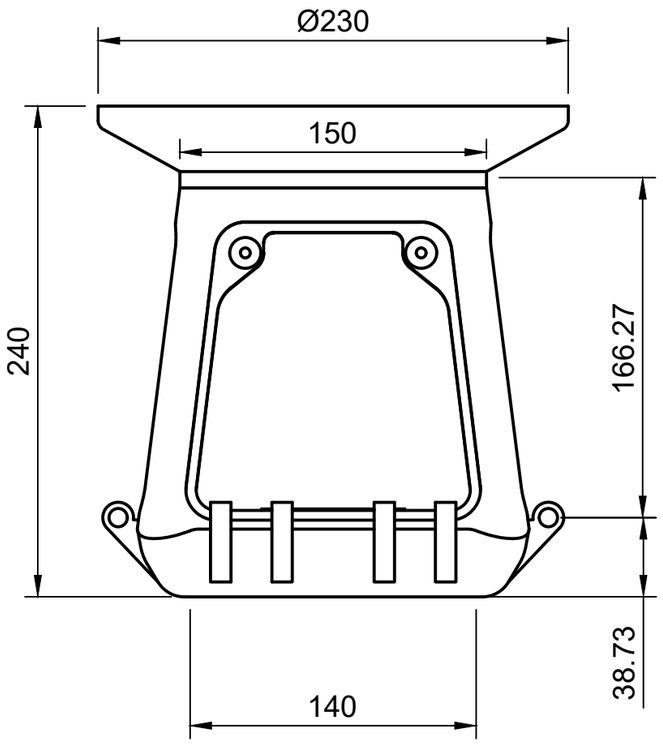

Dept.	Technical reference	Created by	Approved by
		Sergio Marin 06/02/2026	
		Document type	Document status
		Title ECOBOYA_H2S_FULL	DWG No.
			Rev. / Date of issue / Sheet 1/1